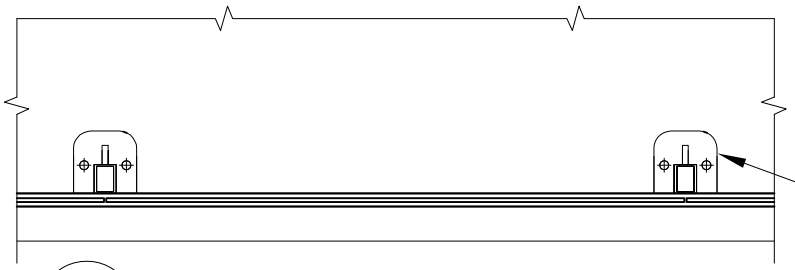

1 S2 TOP VIEW

127 MM X 127 MM ALUMINUM BASEPLATE

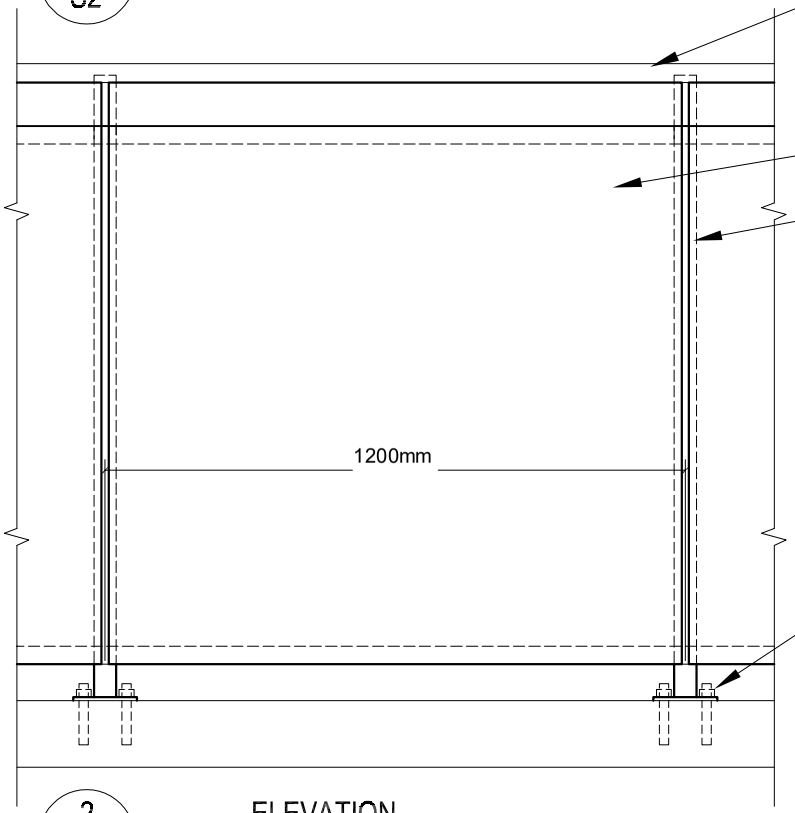

2 S2 ELEVATION

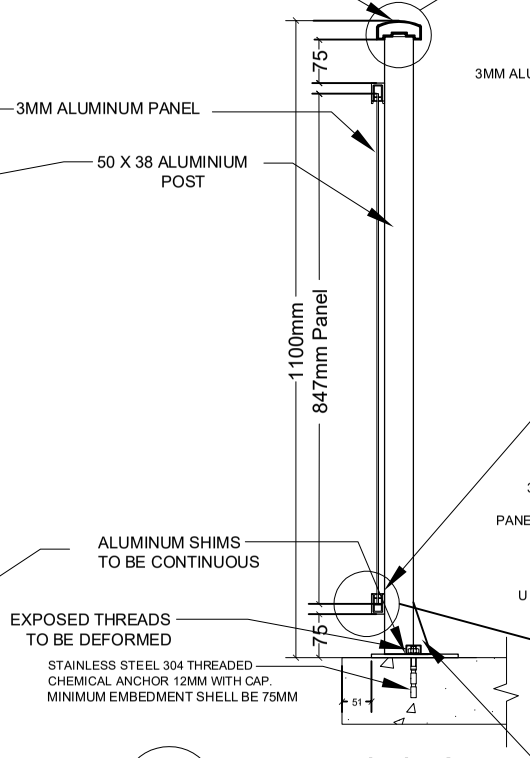

3 S2 SECTION

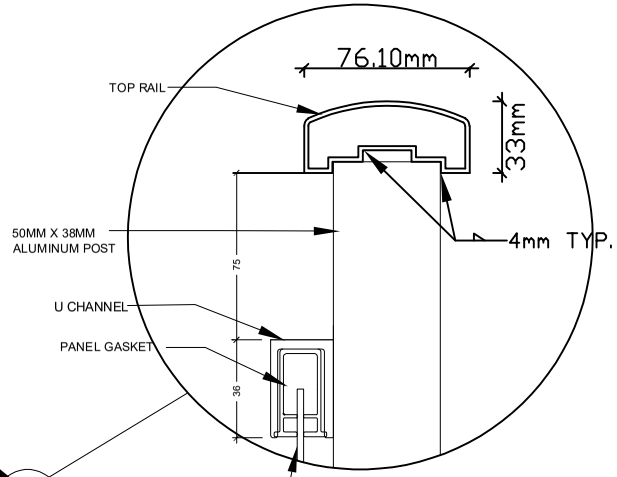

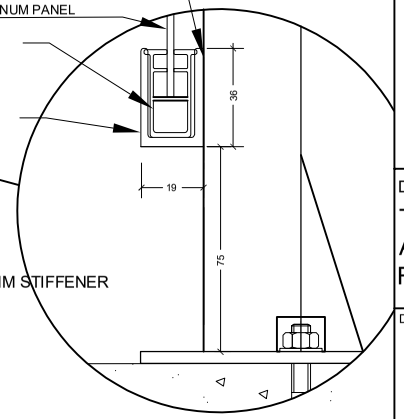

LINK RAILINGS

FIRM:

LINK ALUMINUM RAILING
589 MIDDLEFIELD RD,#15
SCARBOROUGH, ON.
linkaluminumrailing@gmail.com
(647)457-5033

NO.	REVISION / ISSUE	DATE
1		
2		
3		

GENERAL NOTES:

DRAWING NAME:

THREE QUARTER ALUMINUM PANEL RAILING

DRAWING NO:	PROJECT NO:	SHEET NO:
1.3	DATE: 14/08/2018	S3
	SCALE: N.T.S.	